Specification

Model	TR-D4281WDIR3v3
Image sensor	1/2.8" CMOS 8MP
Max resolution	8MP(3840x2144)
Main stream	50Hz: 8MP/6MP/5MP@25fps 60Hz: 8MP@25fps 60Hz: 6MP/5MP/4MP@30fps
Substream	50Hz: 720p/VGA/HVGA@25fps 60Hz: 720p/VGA/HVGA@30fps
Third stream	50Hz: D1/VGA/HVGA@25fps 60Hz: D1/VGA/HVGA@30fps
Electronic shutter speed	1/2 ~ 1/12 500 s
Day/Night mode	Mechanical ICR
Sensitivity	0.003Lux (F1.6)
IR range	up to 30 m
Lens (mm)	2.8
Field of view (horiz./vert.)	105˚±5˚ / 54˚±5˚
Axes setting	Pan: 0˚-55˚ Tilt: 0˚-90˚ Rotation: 0˚-60˚
WDR	Real WDR (120dB)
Digital noise reduction	3D DNR
Video compression	H.265+ / H.265 / H.264
Bitrate	up to 16Mbps
Local storage	MicroSD up to 512GB
Audio	Built-in microphone 1 in / 1 out
Corridor mode	Yes
IVS	Yes

General

Power supply	PoE (802.3af) / 12V DC
PoE Class	3
Power consumption	DC: 5.6W PoE: 6.8W
Case material	Metal
Dimensions (mm)	Ø102.20 x 56.38
Weight Net/Gross (g)	310 / 400
Protection	IP66, IK10
Power surge suppressor	TVS 4000V
Working temperature	-40°C ... +60°C

Technical support

www: helpdesk.trassir.com
mail: helpdesk@trassir.com

Data _____ Stamp _____

Here is the confirmation form for warranty assurance

TR-D4281WDIR3v3

Outdoor IR Network Camera

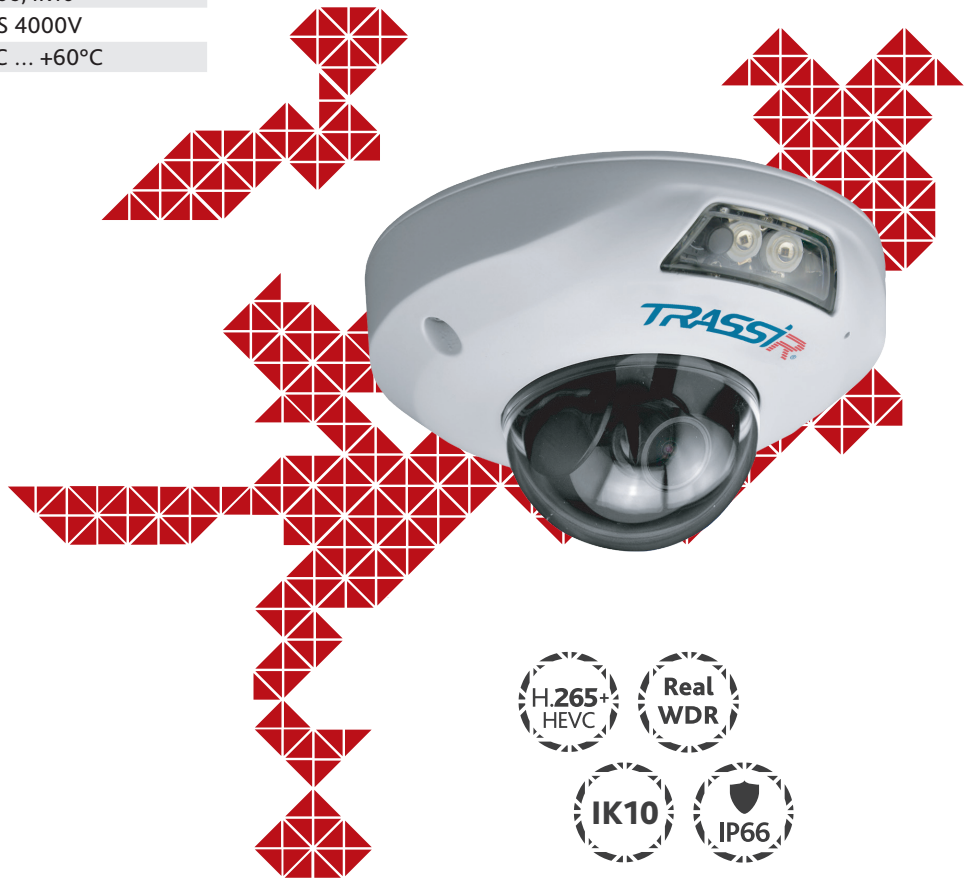

Note: read user manual before using
Website: www.trassir.com
For any inquiry: info@trassir.com

Introduction

Congratulations on purchasing TR-D4281WDIR3v3* IP-camera.
Please read User Manual before using the camera.

* This datasheet applies to all camera modifications of this model.
The modification is indicated by a Latin letter in brackets in the camera name.

Key features

- Supports H.265+
- Wide Dynamic Range (Real WDR 120dB)
- IR range up to 30 m
- Built-in video archive (Edge Storage) – local recording on MicroSD card* up to 512GB with HotSwap support
- Two-way audio (1 line in / 1 line out, built-in microphone)
- TCP/IP, HTTP, FTP, DHCP, DNS, DDNS, RTP, RTSP, RTCP, PPPoE, UPnP, SMTP, NTP, Onvif protocols
- IVS: Face detector; Human detection; Line crossing; Intrusion detection; Loitering; Vehicle detection, Non-Motor Vehicle detection
- Power supply 12V DC or PoE

* MicroSD Card is not included into camera package

Camera package

1. IP camera ..... 1 pc.
2. User Manual ..... 1 pc.
3. Mounting kit ..... 1 pc.

Attention!

The power supply should meet the following requirements: output voltage, current, polarity, and working temperature. When using the camera in thunderstorm conditions, make sure there is a lightning rod or unplug the power connector.
Pay attention to the temperature requirements for IP camera operation. Avoid using the device in excessively high or low temperatures.
Do not install the camera near heaters. Do not point the camera lens at the sun or at bright objects as this can damage the image sensor.

1612-24.6.26

Connecting

To use the IP camera, you need a PC connected to your local network and a browser.

1. Connect the IP camera to the network.
2. When the camera is connected through a switch which doesn't support PoE, connect the adapter to the power jack.

Dimensions

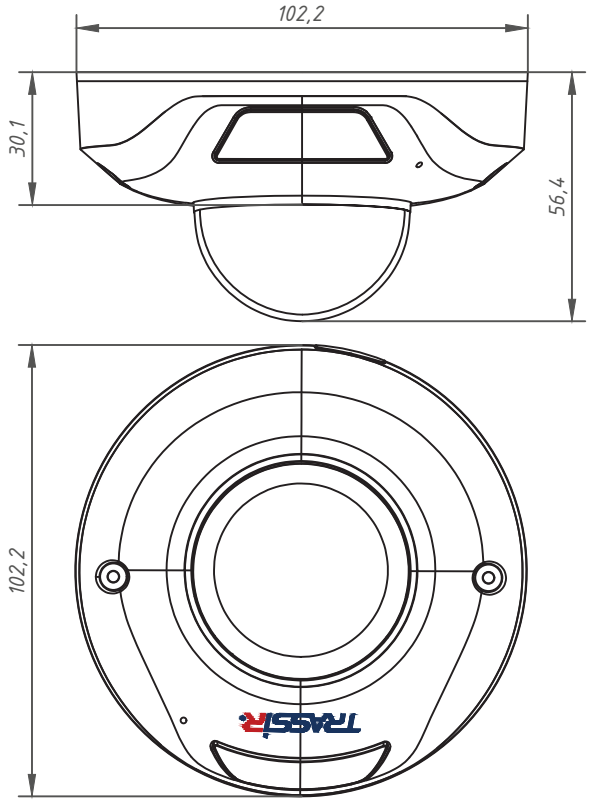

Manual setting of network parameters

In order to connect to the IP camera, the PC should be in the same local network as the camera. The IP address of the camera, the PC and any other device on the network should not match.

The IP camera has the following default settings:
- *IP address: 192.168.1.188*
- *Subnet mask: 255.255.0.0*
- *Gateway: 192.168.1.1*
- *HTTP-port: 80*
- *username: admin*
- *password: admin*

PC network settings example:
- *IP address: 192.168.1.10;*
- *Subnet mask: 255.255.0.0.*

There are 3 options to set up your camera:

1. Change IP address of a camera manually.
   Start your browser, connect to IP camera and enter your username and password. Choose appropriate menu item and change network settings of IP camera.

2. Set up camera IP address using fast configuration utility that can be downloaded from www.trassir.com.

3. Change IP camera settings using TRASSIR professional software.

You can find detailed camera settings instructions in User Manual that can be downloaded from trassir.com.